TEKNO RC — Setup Sheet — EMT410 2.0

Name: Box Stock **Date:** _____ **Event:** _____ **Ambient Temp:** _____

Track: INDOOR ○ OUTDOOR ○ **Size:** SMALL ○ MEDIUM ○ LARGE ○ **Traction:** LOW ○ MEDIUM ○ HIGH ○

Surface: SMOOTH ○ BUMPY ○ RUTTED ○ **Type:** LOOSE / LOAMY ○ HARD PACKED ○ BLUE GROOVE ○ CLAY ○ ASTRO ○

Condition: DUSTY ○ DRY ○ WET ○ MUDDY ○

Ackerman/Bumpsteer/Servo Saver

WASHERS: 1

2 FULL TURNS FROM FULLY TIGHT

Front End:

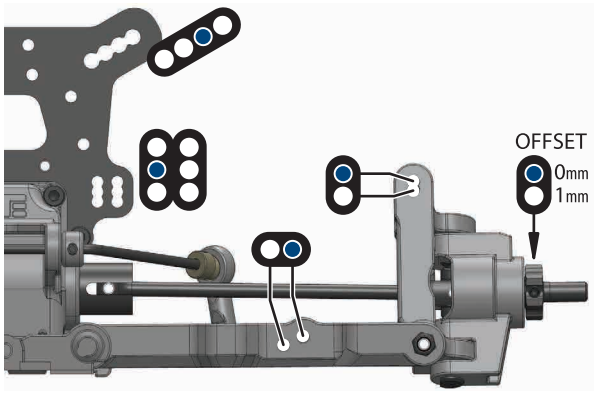

Suspension:

RIDE HEIGHT: Chassis Level CAMBER: -2°

CASTER BLOCK: 18° SWEEP: 0°

KICK UP: 10° TOE: 2.0° out

SWAY BAR: N/A DROOP: 98mm

Shocks:

OIL: 700 CST BRAND: Kit

PISTON: TKR6705E SPRING: TKR6107

REBOUND: 0% BUILD: emul

Rear End:

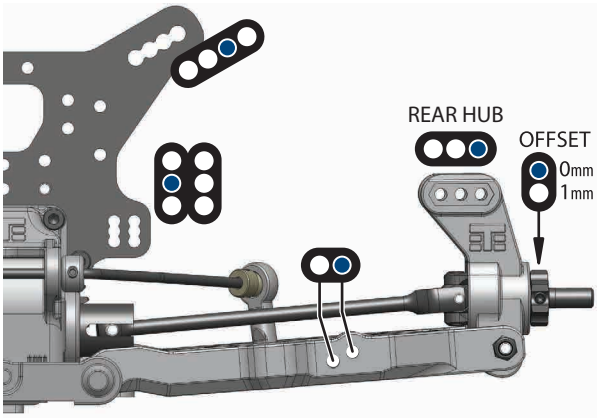

Suspension:

RIDE HEIGHT: Bones Level CAMBER: -2°

ANTI-SQUAT: 1° TOE: 2.5°

SWAY BAR: N/A DROOP: 108mm

Shocks:

OIL: 600 CST BRAND: Kit

PISTON: TKR6705E SPRING: TKR6037

REBOUND: 0% BUILD: emul

Differentials:

OPTION	FRONT	CENTER	REAR
Diff Oil	100k	100k	50k
(TKR5145B)	●	●	●
(TKR5145C)	○	○	○
(TKR9114)	○	○	○
(TKR9114HD)	●	●	●
(TKR51114XB)	○	○	○
(TKR5150)	○	○	○
(TKR5150B)	●	●	●
(TKR5113B)	●	●	●
(TKR5113S)	○	○	○
(TKR5113)	○	○	○
(TKR5149X)	●	●	●
(TKR5149A)	○	○	○
(TKR5149)	○	○	○

Drivetrain:

PINION/SPUR: / 41

Equipment:

ESC:

BATTERY:

MOTOR:

SERVO: 250 oz/in minimum

Wheelbase:

FRONT 0mm

3mm REAR

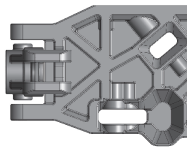

(Shims)

(Thick - 2mm)

(Thin - 1mm)

Chassis Braces:

TURNBUCKLE BRACE: ○ CENTER BRACE: ○

Tires / Wheels:

BRAND / TREAD:

COMPOUND:

INSERT:

WHEEL:

NOTES:

Body/Body Mounts:

BODY MAKE:

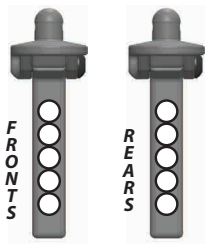

Notes:

Optional Hinge Pin Braces:

"A" Block:

○ TKR9161 (0mm)
○ TKR9161B (-1mm)

"B" Block:

○ TKR9162 (0mm)
○ TKR9162B (-1mm)

"C" Block:

○ TKR9163B (-1mm)
○ TKR9163C (-2mm)

"D" Block:

○ TKR9164B (-1mm)
○ TKR9164C (-2mm)