TEKNO RC Setup Sheet EMT410 2.0

Name: _____ Date: _____ Event: _____ Ambient Temp: _____

Track: INDOOR ○ OUTDOOR ○ Size: SMALL ○ MEDIUM ○ LARGE ○ Traction: LOW ○ MEDIUM ○ HIGH ○

Surface: SMOOTH ○ BUMPY ○ RUTTED ○ Type: LOOSE / LOAMY ○ HARD PACKED ○ BLUE GROOVE ○ CLAY ○ ASTRO ○

Condition: DUSTY ○ DRY ○ WET ○ MUDDY ○

Ackerman/Bumpsteer/Servo Saver

WASHERS: ☐

☐ FULL TURNS FROM FULLY TIGHT

Front End:

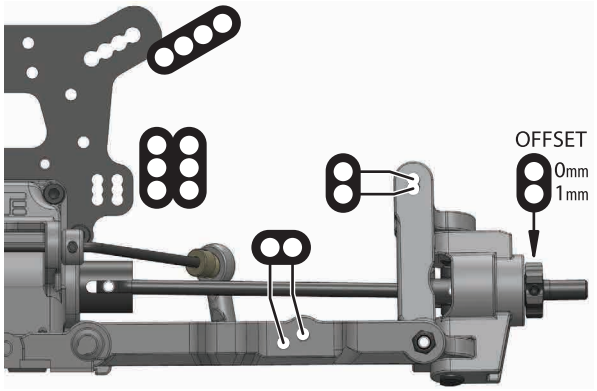

Suspension:

RIDE HEIGHT: CAMBER:

CASTER BLOCK: SWEEP:

KICK UP: TOE:

SWAY BAR: DROOP:

Shocks:

OIL: BRAND:

PISTON: SPRING:

REBOUND: BUILD:

Rear End:

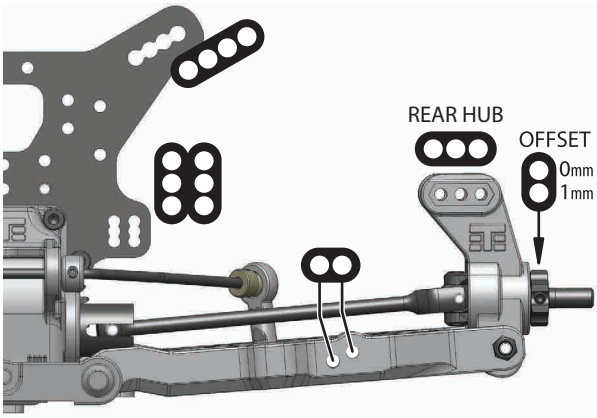

Suspension:

RIDE HEIGHT: CAMBER:

ANTI-SQUAT: TOE:

SWAY BAR: DROOP:

Shocks:

OIL: BRAND:

PISTON: SPRING:

REBOUND: BUILD:

Differentials:

OPTION	FRONT	CENTER	REAR
Diff Oil			
(TKR5145B)	○	○	○
(TKR5145C)	○	○	○
(TKR9114)	○	○	○
(TKR9114HD)	○	○	○
(TKR51114XB)	○	○	○
(TKR5150)	○	○	○
(TKR5150B)	○	○	○
(TKR5113B)	○	○	○
(TKR5113S)	○	○	○
(TKR5113)	○	○	○
(TKR5149X)	○	○	○
(TKR5149A)	○	○	○
(TKR5149)	○	○	○

Drivetrain:

PINION/SPUR: /

Equipment:

ESC:

BATTERY:

MOTOR:

SERVO:

Wheelbase:

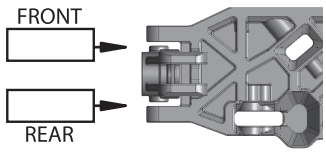

(Shims)

(Thick - 2mm)

(Thin - 1mm)

Chassis Braces:

TURNBUCKLE BRACE: ○ CENTER BRACE: ○

Tires / Wheels:

BRAND / TREAD:

COMPOUND:

INSERT:

WHEEL:

NOTES:

Body/Body Mounts:

BODY MAKE:

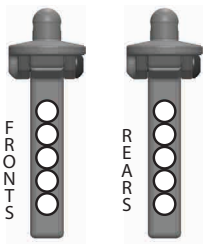

Notes:

Optional Hinge Pin Braces:

"A" Block:

TKR9161 (0mm)
TKR9161B (-1mm)

"B" Block:

TKR9162 (0mm)
TKR9162B (-1mm)

"C" Block:

TKR9163B (-1mm)
TKR9163C (-2mm)

"D" Block:

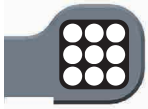

TKR9164B (-1mm)
TKR9164C (-2mm)